C&F Green Energy

The *Best* Wind Turbines in the World

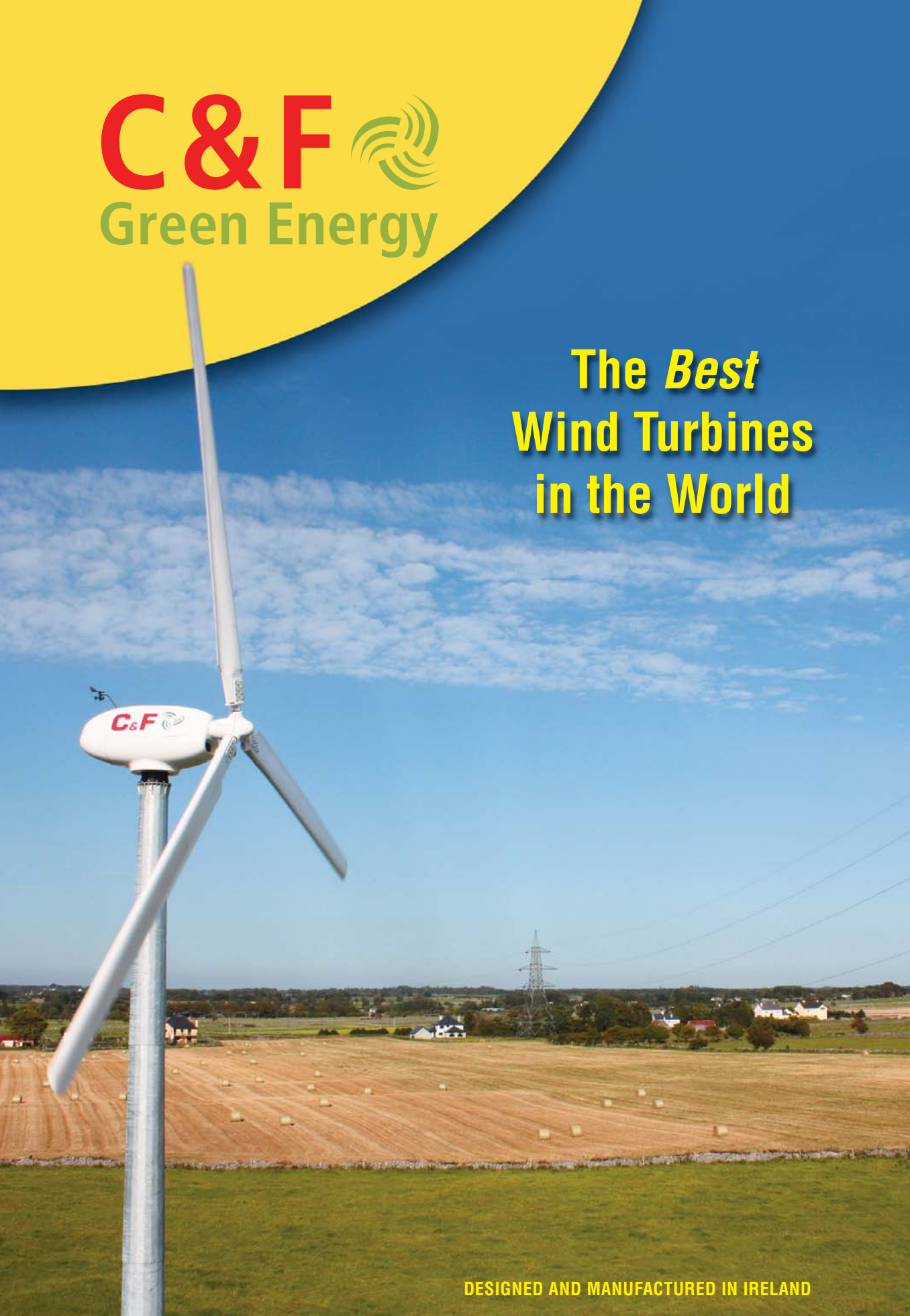

DESIGNED AND MANUFACTURED IN IRELAND

C&F Green Energy

Generator

Designed and built at C&F in Athenry, Co. Galway Ireland. This axial flux permanent magnet air cooled multiple generator will give a lifetime of efficient, trouble-free electrical production.

This is achieved through multi plate axial configuration which also facilities modular construction with multiple independent outputs. This feature gives us the ability to design turbines to specific customer needs.

Blade Pitch Control

(Pitch Actuator)

The blades are automatically controlled to optimise aerodynamic performance under different operating conditions. Bigger blades give more power but demand a more sophisticated control mechanism. C&F have adopted mega turbine pitch control technology, giving us perfect control over each model.

This guarantees power production at the lowest wind speed as well as at the highest wind speeds. The overall result is the most efficient micro turbine available in the world today.

Wind Vane Cup Anemometer

(Yaw Actuator)

A wind direction vane is monitored by the turbine microprocessor which then activates the yaw motor to align the turbine into the wind. This feature, usually employed on large turbines, improves performance and energy yield.

Electro Mechanical Brake

An electro mechanical brake is employed as a failsafe back-up to the blade pitch brake. This is an essential safety feature usually employed on large turbines and it acts in such a way that the brake automatically engages should a fault be detected.

Blades

Our blades are manufactured from aerospace type composite materials which are stronger than steel. The CF6/11 turbines use carbon fibre reinforced polypropylene while the larger machines use glass fibre reinforced vinyl ester.

Mast

All C&F turbines employ a monopole mast which can withstand hurricane force winds. The mast is erected using a hydraulic ram which enhances operator safety and facilitates ongoing safety.

Controller/GSM

C&F have developed their own microprocessor to control their range of turbines. The microprocessor is GSM enabled allowing the machine to be remotely monitored and controlled over the internet or even by mobile phone. This facility allows us to monitor your turbine and ensure that it is operating to its full potential at all times. This provides the customer with peace of mind that their investment is continuously working for them.

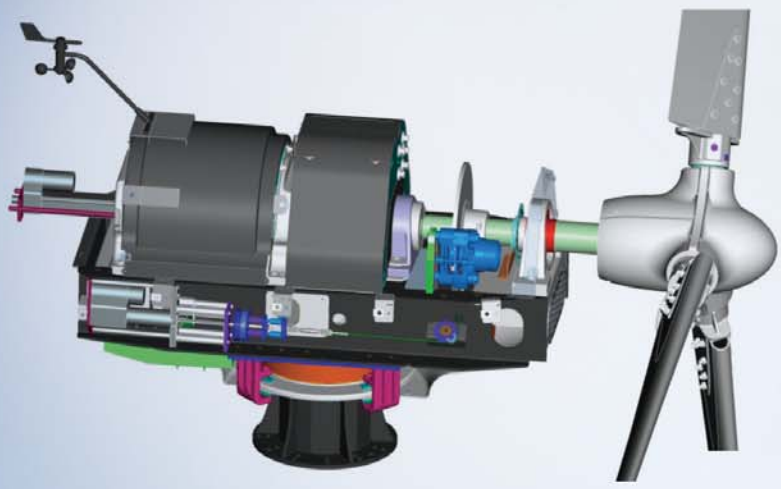

Connection Options (Grid Tie or Off Grid Connections)

We offer a complete hybrid solution including backup DC power, battery storage and control systems.

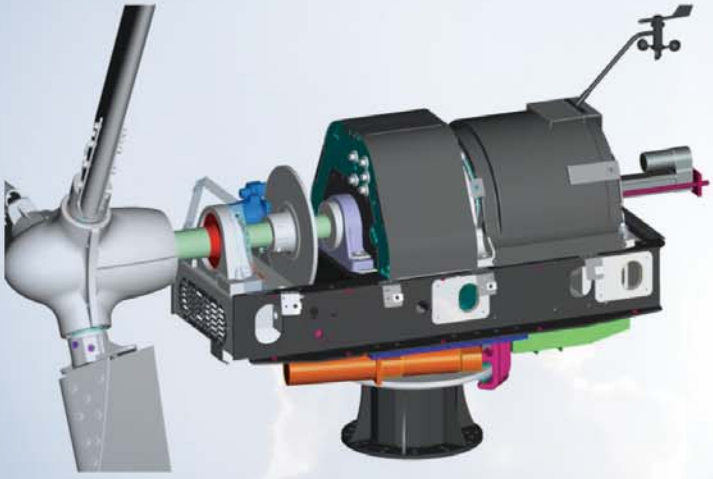

CARBON CREDITS

Leading the way in the green energy field, C&F Green Energy is currently establishing a carbon credits system for its customers. Once your turbine has been installed, the turbines output will be monitored on an ongoing basis. C&F will then issue the customer with an accredited certificate detailing the carbon credits produced each year. This can, in turn, be offset against a carbon tax.

SPECIFICATION SHEET

Rotor Diameter	6 m
Tower	10 m Monopole
Max. Power	6 kW
An. Yield @ 5 m/s av.	11,300 kWh
Rated Wind Speed	9 .5 m/s
Min active wind speed	1.2 m/s
Cut out wind speed	NONE
Annual Carbon Savings	8 - 14 Tonnes
Noise @ 5 m/s at 60m	40dBA
Rated RPM	220 rpm
Method of Installation	Hydraulic Tilt Installation

GSM CONTROLLED AS STANDARD

Annual Average Wind Speed in m/s	Annual Yield kWh
4.5	8,670
5	11,290
5.5	13,978
6	16,570
6.5	18,932
7	20,969
8	23,915

Single Phase

CF 6d

Power Curve: CF6

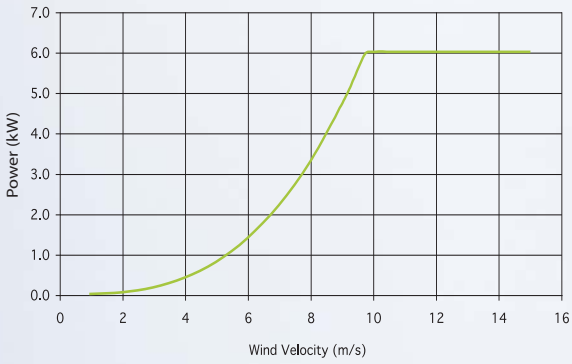

SPECIFICATION SHEET

Rotor Diameter	8 m
Tower	15 m Monopole
Max. Power	6 kW
An. Yield @ 5 m/s av.	17,000 kWh
Rated Wind Speed	8.0 m/s
Min active wind speed	1.2 m/s
Cut out wind speed	NONE
Annual Carbon Savings	8 - 14 Tonnes
Noise @ 5 m/s at 60m	42 dBA
Rated RPM	220 rpm
Method of Installation	Hydraulic Tilt Installation

GSM CONTROLLED AS STANDARD

Annual Average Wind Speed in m/s	Annual Yield kWh
4.5	13,761
5	17,065
5.5	20,188
6	23,000
6.5	25,400
7	27,356
8	29,905

Single Phase

CF 6e

Power Curve: CF6e

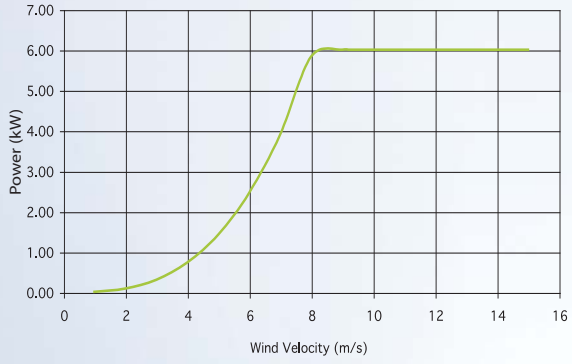

SPECIFICATION SHEET

Rotor Diameter	9 m
Tower	15 m Monopole
Max. Power	11 kW
An. Yield @ 5 m/s av.	24,000 kWh
Rated Wind Speed	9 m/s
Min active wind speed	1.2 m/s
Cut out wind speed	NONE
Annual Carbon Savings	14 - 19 Tonnes
Noise @ 5 m/s at 60m	42 dBA
Rated RPM	220 rpm
Method of Installation	Hydraulic Tilt Installation

GSM CONTROLLED AS STANDARD

Annual Average Wind Speed in m/s	Annual Yield kWh
4.5	18,880
5	24,170
5.5	29,450
6	34,400
6.5	38,820
7	42,550
7.5	45,530
8	47,765

Single or Three Phase

CF11/ CF11i

Power Curve: CF11

SPECIFICATION SHEET

Rotor Diameter	10.8 m
Tower	15 m Monopole
Max. Power	15 kW
An. Yield @ 5 m/s av.	34,400 kWh
Rated Wind Speed	9 m/s
Min active wind speed	2.2 m/s
Cut out wind speed	NONE
Annual Carbon Savings	19 - 23 Tonnes
Noise @ 5 m/s at 60m	40 dBA
Max RPM	110 rpm
Method of Installation	Hydraulic Tilt Installation

GSM CONTROLLED AS STANDARD

Annual Average Wind Speed in m/s	Annual Yield kWh
4.5	26,980
5	34,400
5.5	41,730
6	48,570
6.5	54,630
7	59,700
7.5	63,750
8	66,750

Single or Three Phase

CF15/ CF15i

Power: CF15

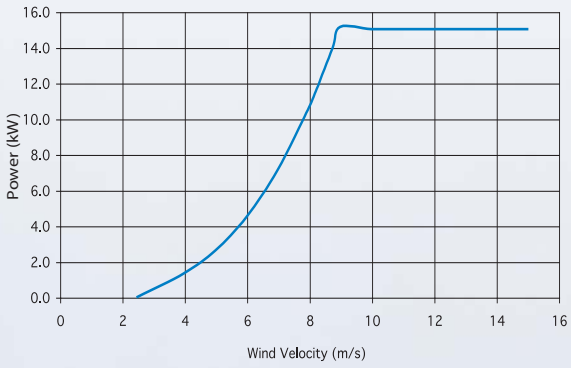

SPECIFICATION SHEET

Rotor Diameter	12.8 m
Tower	20 m Monopole
Max. Power	20 kW
An. Yield @ 5 m/s av.	47,750 kWh
Rated Wind Speed	9 m/s
Min active wind speed	2.2 m/s
Cut out wind speed	NONE
Annual Carbon Savings	26 - 30 Tonnes
Noise @ 5 m/s at 60m	40 dBA
Rated RPM	110 rpm
Method of Installation	Hydraulic Tilt Installation

GSM CONTROLLED AS STANDARD

Annual Average Wind Speed in m/s	Annual Yield kWh
4.5	37,600
5	47,750
5.5	57,700
6	66,930
6.5	75,050
7	81,820
7.5	87,160
8	91,100

Single or Three Phase

CF 20

Power: CF20

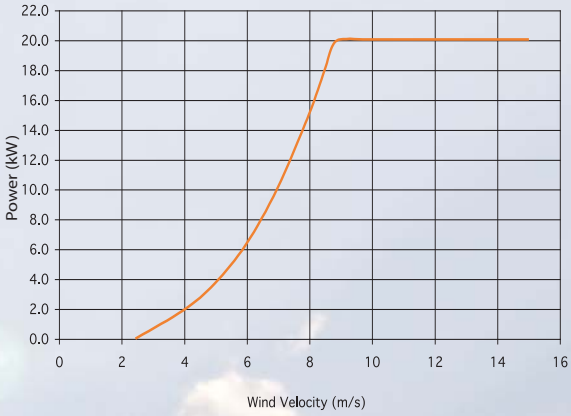

SPECIFICATION SHEET

Rotor Diameter	20 m
Tower	29 m Monopole
Max. Power	50 kW
An. Yield @ 5 m/s av.	117,250 kWh
Rated Wind Speed	9 m/s
Min active wind speed	2.2 m/s
Cut out wind speed	NONE
Annual Carbon Savings	70 - 80 Tonnes
Noise @ 5 m/s at 60m	TBA
Rated RPM	50 rpm
Method of Installation	Crane

GSM CONTROLLED AS STANDARD

Annual Average Wind Speed in m/s	Annual Yield kWh
4.5	92,150
5	117,250
5.5	141,940
6	164,900
6.5	185,160
7	202,100
7.5	215,500
8	225,400

Single or Three Phase

CF 50

Power: CF50

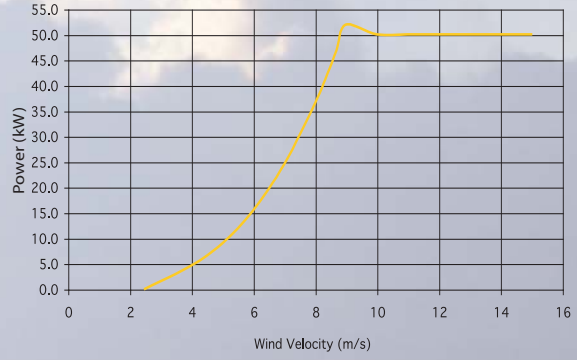

C&F Green Energy

Cashla, Athenry, Co. Galway, Ireland
Tel: + 353 91 790868
Email: info@cfgreenenergy.com
Web: www.cfgreenenergy.com

C&F GROUP
Global Contract Manufacturers

C&F Green Energy is part of the globally renowned Irish owned C&F Group. C&F was first established in 1989 in Galway, Ireland and now employs over one thousand people in over six sites worldwide. With manufacturing locations in Ireland, Germany, the UK, The Czech Republic, the Philippines and China. C&F is a global company with a local face.

The proof of our engineering capabilities can be seen from our customer list which includes IBM, EMC, BMW, Mercedes, Ford, VW, Thermo King to name but a few, all of which have awarded us multiple global contracts.

C&F Green Energy was officially established by the C&F Group in 2006. The group recognized the need to provide a more powerful and safer wind energy solution for the home, farm and business owner. With its experience in the manufacturing area, C&F set about designing an innovative wind turbine that would combine unrivalled performance and power with clean aesthetics and reliability.

With this in mind the company has assembled a world class team of industrial design experts in this field to deliver solutions based on innovation and engineering excellence. The group's success is attributed to its unrivalled levels of workmanship quality, streamlined manufacturing processes and un-surpassed levels of customer care and retention. This team has developed an innovative range of medium-sized turbines that incorporate the same advanced technologies that are used in Mega-Watt sized machines. Leveraging off the company's expertise in manufacturing and design and its global reach, has enabled C&F Green Energy to offer this advanced technology at very competitive prices.

Our commitment to customer service and our confidence in our products are evident in the fact that all customer contracts will be directly with C&F Green Energy and all warranties will be carried by C&F Green Energy. This includes the full parts, labour and service warranty that is available for 10 years. As founder and CEO of the C&F Group I am determined to make C&F Green Energy the world leader in small and medium sized generation. We build the best turbines in the world.

John Flaherty
CEO C&F Group

C&F Tooling Ltd., Ireland
C&F Green Energy, Ireland
C&F Automotive Trading as Iralco, Ireland
C&F Manufacturing (UK) Ltd.
C&F Automotive Germany GmbH
C&F Manufacturing CR. S.R.O., Czech Republic
C&F Manufacturing Philippines Corporation, Philippines
C&F Manufacturing China

IT Industry
Automotive Industry
Refrigeration Industry
Air Conditioning Industry
Wind Energy Industry

Delivering world class manufacturing processes all over the world

ESTABLISHED IN 1989. IRISH OWNED.

C&F GROUP Global Contract Manufacturers
guaranteed irish™ promoting irish excellence
IWEA Irish Wind Energy Association
CE
nsai ISO 9001:2000 QUALITY